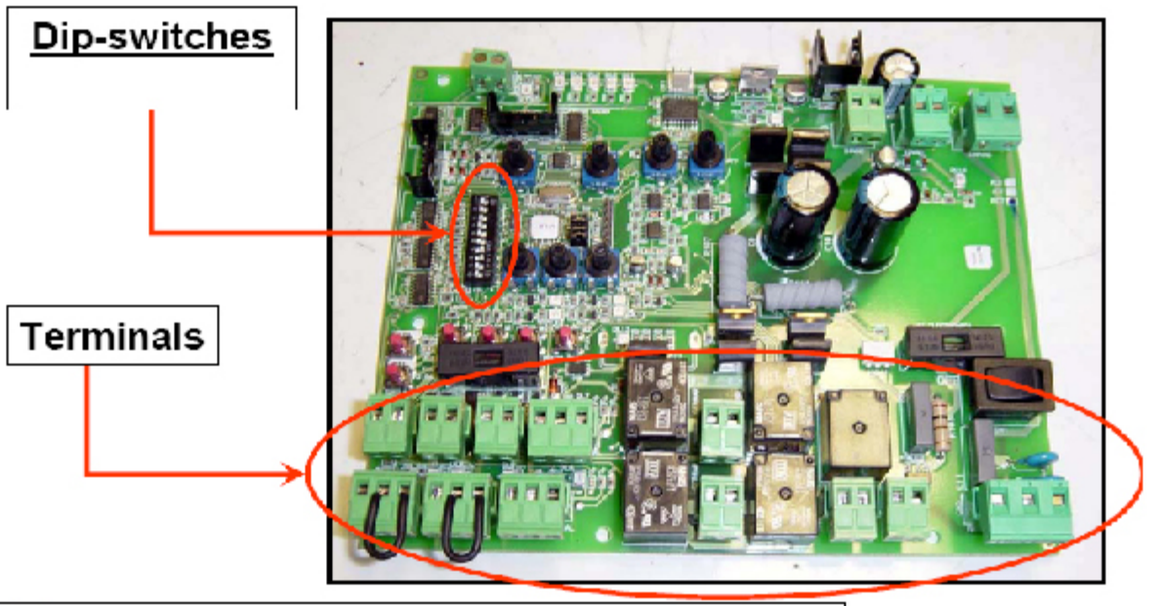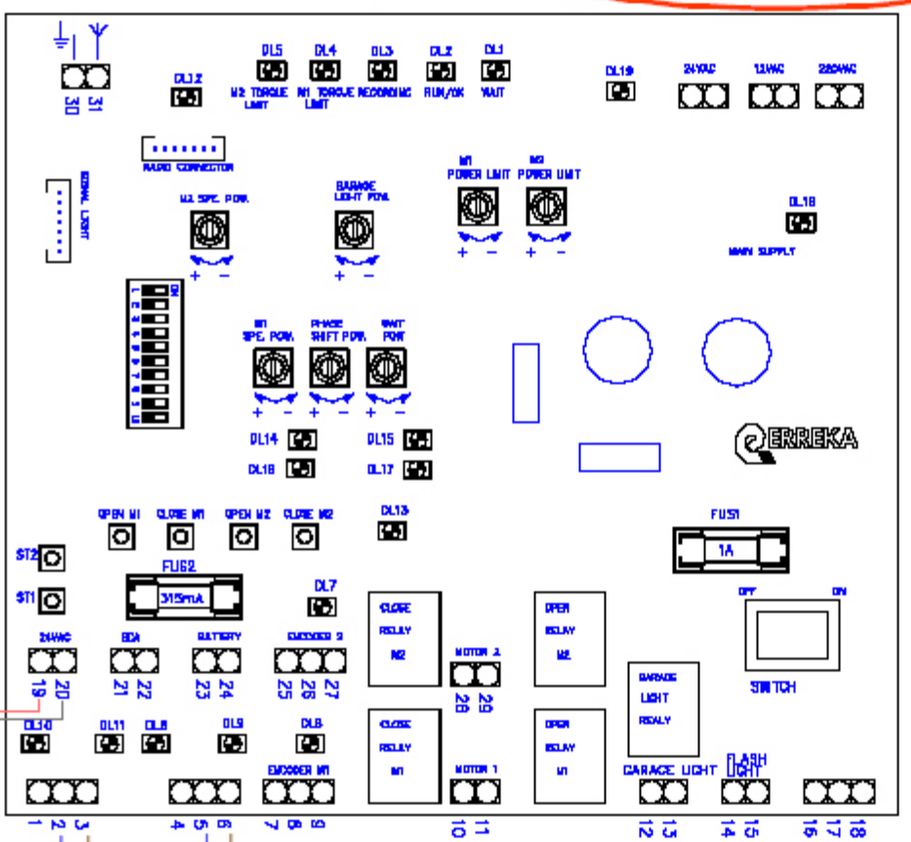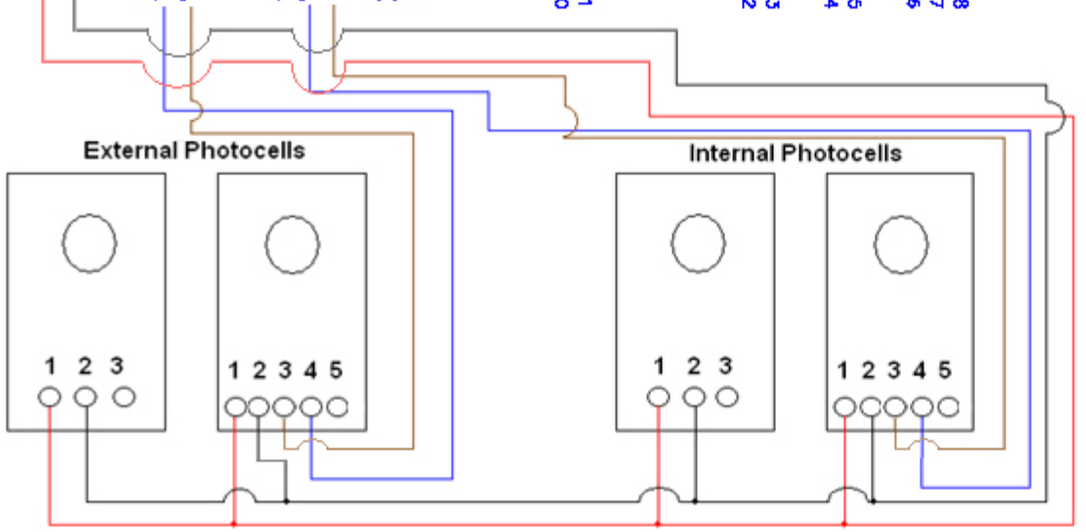Control unit 65-ABC2M-009